Rev. Mark	Description	Date

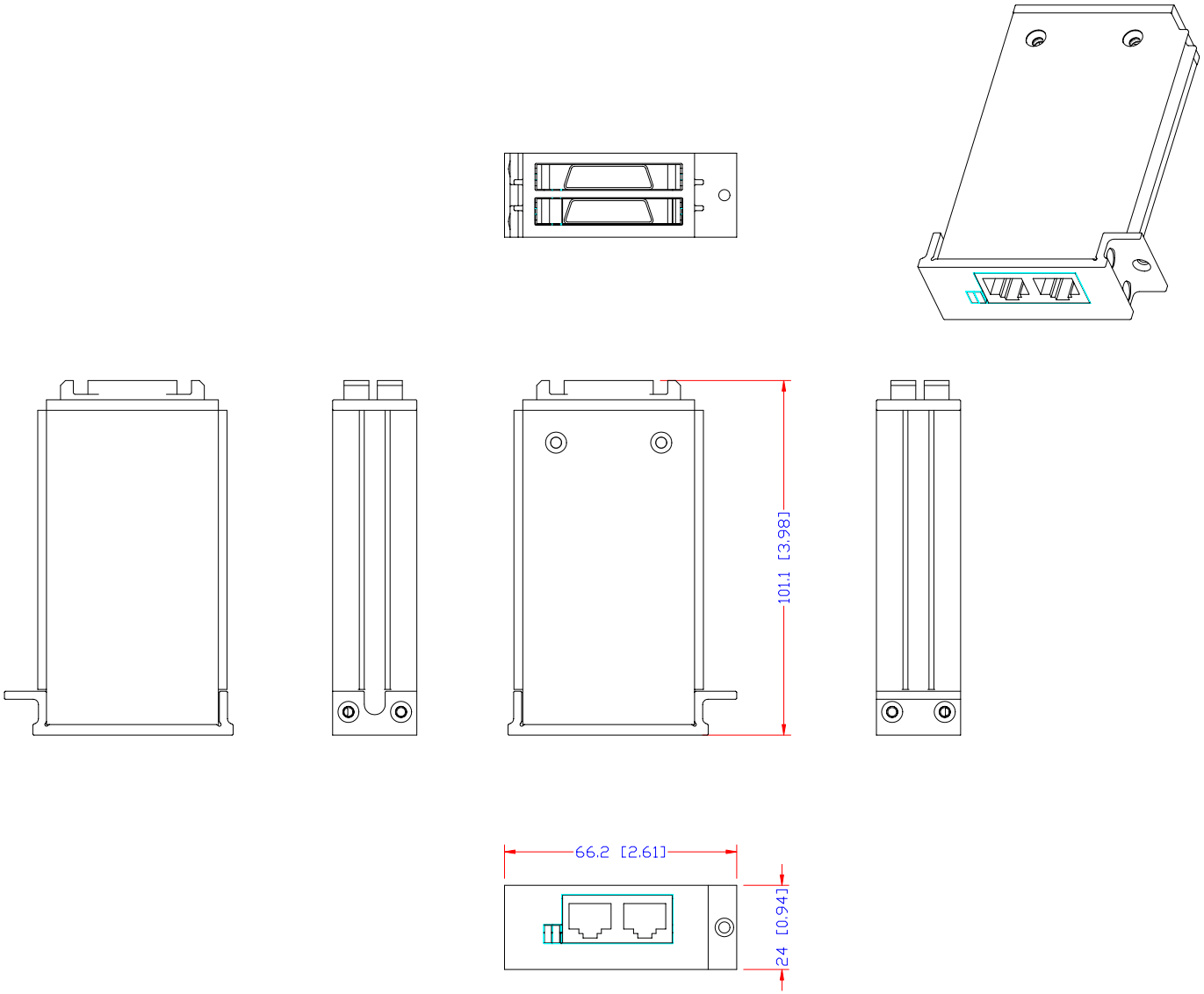

Specified Tolerance			
Length	Class 1	Class 2	Class 3
0.5~6	±0.05	±0.1	±0.15
6~30	±0.1	±0.2	±0.25
30~120	±0.2	±0.3	±0.35
120~315	±0.3	±0.5	±0.55
315~1000	±0.5	±0.7	±0.9

MOXA®
Tel:+886-2-89191230
Fax:+886-2-89191231
www.moxa.com

Designer	Porjection	Unit	mm	Tolerance	Class 2	Product Model	IM-2GTX	Frame	A4
Vincent	3rd Angle	Scale	1:1	Material	AL T=2.0	Drawn Name	outside		
		Date	99.09.25	File Name	IM-2GTX.DWG	Product No.		Ver.	1.0