EDS-G508E Series

8G-port full Gigabit managed Ethernet switches

Features and Benefits

- Turbo Ring and Turbo Chain (recovery time < 50 ms @ 250 switches), RSTP/STP, and MSTP for network redundancy
- RADIUS, TACACS+, MAB Authentication, SNMPv3, IEEE 802.1X, MAC ACL, HTTPS, SSH, and sticky MAC-addresses to enhance network security
- EtherNet/IP, PROFINET, and Modbus TCP protocols supported for device management and monitoring
- Supports MXstudio for easy, visualized industrial network management
- V-ON™ ensures millisecond-level multicast data and video network recovery

Certifications

Introduction

The EDS-G508E switches are equipped with 8 Gigabit Ethernet ports, making them ideal for upgrading an existing network to Gigabit speed or building a new full Gigabit backbone. Gigabit transmission increases bandwidth for higher performance and transfers large amounts of triple-play services across a network quickly.

Redundant Ethernet technologies such as Turbo Ring, Turbo Chain, RSTP/STP, and MSTP increase the reliability of your system and improve the availability of your network backbone. The EDS-G508E Series is designed especially for demanding communication applications, such as video and process monitoring, ITS, and DCS systems, all of which can benefit from a scalable backbone construction.

Additional Features and Benefits

- Command line interface (CLI) for quickly configuring major managed functions
- DHCP Option 82 for IP address assignment with different policies
- Supports EtherNet/IP, PROFINET, and Modbus TCP protocols for device management and monitoring
- IGMP snooping and GMRP for filtering multicast traffic
- Port-based VLAN, IEEE 802.1Q VLAN, and GVRP to ease network planning
- Port mirroring for online debugging
- Automatic warning by exception through email and relay output
- QoS (IEEE 802.1p/1Q and TOS/DiffServ) to increase determinism
- Port Trunking for optimum bandwidth utilization
- RADIUS, TACACS+, MAB Authentication, SNMPv3, IEEE 802.1x, MAC ACL, HTTPS, SSH, and sticky MAC address to enhance network security
- SNMPv1/v2c/v3 for different levels of network management
- RMON for proactive and efficient network monitoring
- Bandwidth management to prevent unpredictable network status
- Lock port function for blocking unauthorized access based on MAC address
- Supports the ABC-02-USB (Automatic Backup Configurator) for system configuration backup/restore and firmware upgrade

Specifications

Input/Output Interface

Alarm Contact Channels	1 Relay output with current carrying capacity of 1 A @ 24 VDC
Buttons	Reset button
Digital Input Channels	1
Digital Inputs	+13 to +30 V for state 1 -30 to +3 V for state 0 Max. input current: 8 mA

Ethernet Interface

10/100/1000BaseT(X) Ports (RJ45 connector)	8 Auto negotiation speed Full/Half duplex mode Auto MDI/MDI-X connection
Standards	IEEE 802.3 for 10BaseT IEEE 802.3u for 100BaseT(X) IEEE 802.3ab for 1000BaseT(X) IEEE 802.3x for flow control IEEE 802.1D-2004 for Spanning Tree Protocol IEEE 802.1w for Rapid Spanning Tree Protocol IEEE 802.1s for Multiple Spanning Tree Protocol IEEE 802.1p for Class of Service IEEE 802.1Q for VLAN Tagging IEEE 802.1X for authentication IEEE 802.3ad for Port Trunk with LACP

Ethernet Software Features

Filter	802.1Q VLAN BPDU Filter BPDU Guard GMRP GVRP IGMP v1/v2/v3 Port-based VLAN
Industrial Protocols	EtherNet/IP Modbus TCP PROFINET IO Device
Management	LLDP Back Pressure Flow Control BOOTP Port Mirroring DHCP Option 66/67/82 DHCP Server/Client Fiber check Flow control IPv4/IPv6 RARP RMON SCP SMTP SNMP Inform SNMPv1/v2c/v3 Syslog Telnet TFTP
MIB	Ethernet-like-MIB MIB-II Bridge-MIB P-BRIDGE MIB Q-BRIDGE-MIB RMON MIB Groups 1, 2, 3, 9 RSTP MIB
Redundancy Protocols	Link Aggregation MRP MSTP RSTP STP Turbo Chain Turbo Ring v1/v2

Security	Broadcast storm protection HTTPS/SSL TACACS+ SNMPv3 MAB authentication Sticky MAC NTP authentication MAC ACL Port Lock RADIUS SSH SMTP with TLS
Time Management	NTP Server/Client SNTP

Switch Properties

IGMP Groups	2048
Jumbo Frame Size	9.6 KB
MAC Table Size	8 K
Max. No. of VLANs	256
Packet Buffer Size	4 Mbits
Priority Queues	4
VLAN ID Range	VID 1 to 4094

USB Interface

Storage Port	USB Type A

LED Interface

LED Indicators	PWR1, PWR2, STATE, FAULT, 10/100M (TP port), 1000M (TP port), MSTR/HEAD, CPLR/TAIL

Serial Interface

Console Port	USB-serial console (Type B connector)

DIP Switch Configuration

DIP Switches	Turbo Ring, Master, Coupler, Reserve

Power Parameters

Connection	2 removable 4-contact terminal block(s)
Input Current	0.37 A @ 24 VDC
Input Voltage	12/24/48/-48 VDC Redundant dual inputs
Operating Voltage	9.6 to 60 VDC
Overload Current Protection	Supported
Reverse Polarity Protection	Supported

Physical Characteristics

Housing	Metal
IP Rating	IP30
Dimensions	79.2 x 135 x 137 mm (3.1 x 5.3 x 5.4 in)

Weight	1440 g (3.18 lb)
Installation	DIN-rail mounting Wall mounting (with optional kit)

Environmental Limits

Operating Temperature	EDS-G508E: -10 to 60°C (14 to 140°F) EDS-G508E-T: -40 to 75°C (-40 to 167°F)
Storage Temperature (package included)	-40 to 85°C (-40 to 185°F)
Ambient Relative Humidity	5 to 95% (non-condensing)

Standards and Certifications

Safety	UL 508
EMC	EN 61000-6-2/-6-4
EMI	CISPR 32, FCC Part 15B Class A
EMS	IEC 61000-4-2 ESD: Contact: 8 kV; Air: 15 kV IEC 61000-4-3 RS: 80 MHz to 1 GHz: 10 V/m IEC 61000-4-4 EFT: Power: 4 kV; Signal: 4 kV IEC 61000-4-5 Surge: Power: 4 kV; Signal: 4 kV IEC 61000-4-6 CS: 10 V IEC 61000-4-8 PFMF
Hazardous Locations	ATEX Class I Division 2
Power Substation	IEC 61850-3 IEEE 1613
Railway	EN 50121-4
Traffic Control	NEMA TS2
Vibration	IEC 60068-2-6
Shock	IEC 60068-2-27
Freefall	IEC 60068-2-32
Maritime	DNV LR ABS NK

MTBF

Time	814,608 hrs
Standards	Telcordia (Bellcore), GB

Warranty

Warranty Period	5 years
Details	See www.moxa.com/warranty

Package Contents

Device	1 x EDS-G508E Series switch
Cable	1 x USB type A male to USB type B male

Installation Kit	4 x cap, plastic, for RJ45 port
Documentation	1 x quick installation guide 1 x warranty card 1 x product certificates of quality inspection, Simplified Chinese 1 x product notice, Simplified Chinese

Dimensions

Unit: mm (inch)

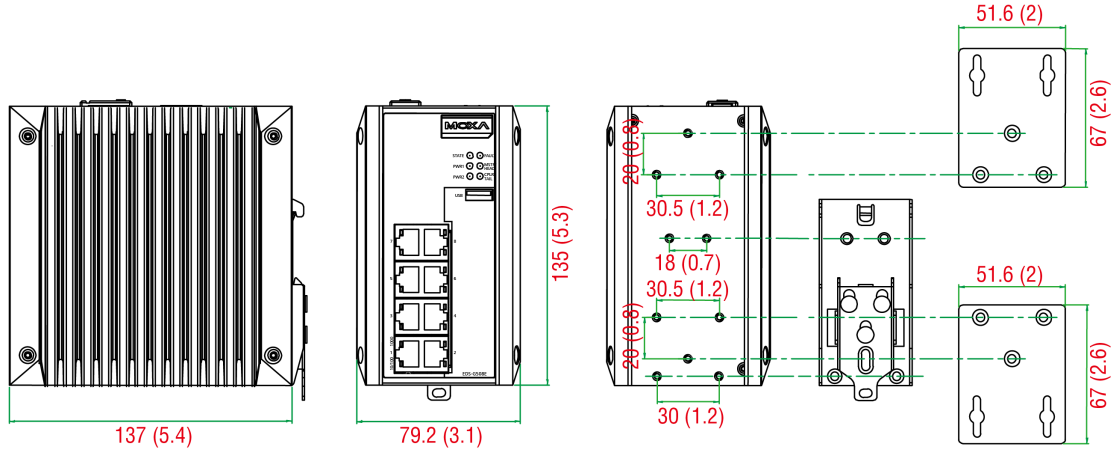

Side View Front View Rear View DIN-Rail/Panel-Mounting Kit

Ordering Information

Model Name	10/100/1000BaseT(X) Ports RJ45 Connector	Operating Temp.
EDS-G508E	8	-10 to 60°C
EDS-G508E-T	8	-40 to 75°C

Accessories (sold separately)

Storage Kits

ABC-02-USB	Configuration backup and restoration tool, firmware upgrade, and log file storage tool for managed Ethernet switches and routers, 0 to 60°C operating temperature
ABC-02-USB-T	Configuration backup and restoration tool, firmware upgrade, and log file storage tool for managed Ethernet switches and routers, -40 to 75°C operating temperature

Power Supplies

HDR-60-24	60 W/2.5 A DIN-rail 24 VDC power supply, universal 85 to 264 VAC or 120 to 370 VDC input voltage, -30 to 70°C operating temperature
NDR-120-24	120 W/5.0 A DIN-rail 24 VDC power supply, universal 90 to 264 VAC or 127 to 370 VDC input voltage, -20 to 70°C operating temperature
NDR-120-48	120 W/2.5 A DIN-rail 48 VDC power supply, universal 90 to 264 VAC or 127 to 370 VDC input voltage, -20 to 70°C operating temperature
NDR-240-48	240 W/5.0 A DIN-rail 48 VDC power supply, universal 90 to 264 VAC or 127 to 370 VDC input voltage, -20 to 70°C operating temperature
MDR-40-24	DIN-rail 24 VDC power supply with 40W/1.7A, 85 to 264 VAC, or 120 to 370 VDC input, -20 to 70°C operating temperature
MDR-60-24	DIN-rail 24 VDC power supply with 60W/2.5A, 85 to 264 VAC, or 120 to 370 VDC input, -20 to 70°C operating temperature

Software

LIC-MXviewOne-NEW-XN-SR	MXview One node license with customizable node quantity (minimum 1 node)

Rack-Mounting Kits

RK-4U	19-inch rack-mounting kit

Wall-Mounting Kits

WK-51-01	Wall mounting kit with 2 plates (51.6 x 67 x 2 mm) and 6 screws

© Moxa Inc. All rights reserved. Updated Jun 01, 2026.

This document and any portion thereof may not be reproduced or used in any manner whatsoever without the express written permission of Moxa Inc. Product specifications subject to change without notice. Visit our website for the most up-to-date product information.