V2403 Series

Fanless, rugged, ready-to-go x86 Industrial IoT embedded computers

Features and Benefits

- Intel Core-i Series processor with three performance options
- -40 to 70°C (system and LTE) operating temperature
- Dual CFast sockets for storing OS and OS backup
- Triple mini-PCIe sockets for storage and wireless modules that support mSATA, Wi-Fi, 3G, LTE, GPS, and Bluetooth
- Variety of interfaces: 4 serial ports, 2 Ethernet LAN ports, 4 DIs, 4 DOs, USB, HDMI, wireless
- EN 61000-6-2 and EN 61000-6-4 certification; meets EMC standard for heavy industry
- Up to 5 Grms anti-vibration and 100 g/11 ms anti-shock protection
- Ready-to-run Debian 8, Windows Embedded Standard 7, and Windows 10 Embedded IoT Enterprise 2016 LTSB platforms
- Moxa Proactive Monitoring utility for system hardware health monitoring
- Moxa Smart Recovery utility to recover system from boot failure (W7E only)

Certifications

Introduction

The V2403 Series fanless x86 embedded computer is based on the Intel® 3rd gen Core-i™ Series processor, features the most reliable I/O design to maximize connectivity, and supports dual wireless modules, making it suitable for a diverse range of communication applications. The computer's thermal design ensures reliable system operation in temperatures ranging from -40 to 70°C (with a special purpose Moxa wireless module installed). The V2403 Series supports "Moxa Proactive Monitoring" for device I/O status monitoring and alerts, system temperature monitoring and alerts, and system power management. Monitoring system status closely makes it easier to recover from errors and provides the most reliable platform for your applications.

Applications

- Remote Terminal Unit (RTU)
- Data acquisition
- M2M communication (smart gateway)
- Digital signage
- Factory automation
- In-vehicle monitor/data logger (transportation)
- Programmable router
- Energy usage optimization
- Predictive maintenance
- Asset management

Appearance

Front View

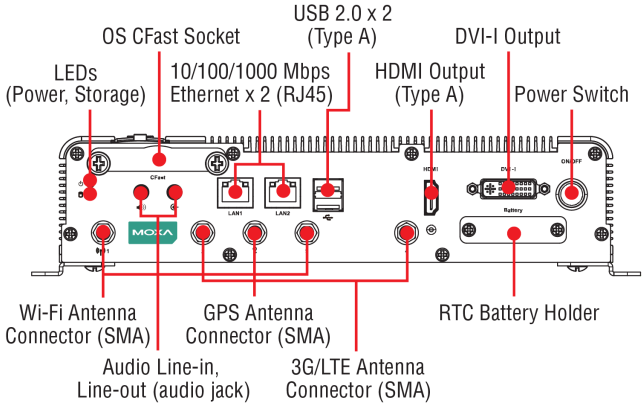

Rear View

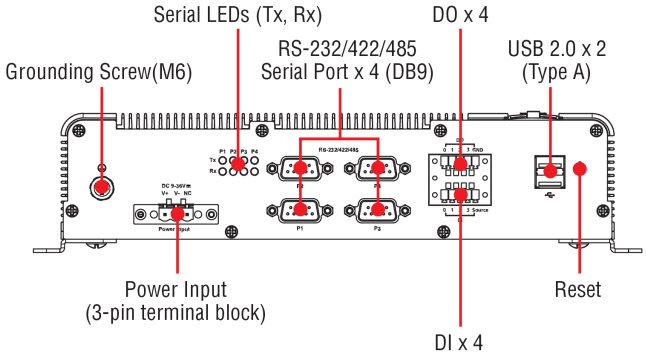

Specifications

Computer

CPU	V2403-C2 Series: Intel® Celeron® Processor 1047UE (2 M cache, 1.40 GHz) V2403-C7 Series: Intel® Core™ i7-3517UE Processor (4 M cache, up to 2.80 GHz)
System Chipset	Mobile Intel® HM65 Express Chipset
Graphics Controller	Intel® HD Graphics
System Memory Pre-installed	Default 4 GB DDR3
System Memory Slot	SODIMM DDR3/DDR3L slot x 1
Supported OS	Linux Debian 8 (Linux kernel v4.1) Windows Embedded Standard 7 (WS7E) 32-bit Windows Embedded Standard 7 (WS7E) 64-bit
Storage Slot	2.5-inch HDD/SSD slots x 1 CFast slot x 2 mSATA slots x 1

Computer Interface

Ethernet Ports	Auto-sensing 10/100/1000 Mbps ports (RJ45 connector) x 2
Serial Ports	RS-232/422/485 ports x 4, software selectable (DB9 male)
USB 2.0	USB 2.0 hosts x 4, type-A connectors
Audio Input/Output	Line in x 1, Line out x 1, 3.5 mm phone jack
Digital Input	DIs x 4
Digital Output	DOs x 4
Expansion Slots	mPCIe slot x 2
Video Output	DVI-I x 1, 29-pin DVI-I connectors (female) HDMI x 1, HDMI connector (type A)
Wi-Fi Antenna Connector	RP-SMA x 2
Cellular Antenna Connector	SMA x 2
Number of SIMs	2
SIM Format	Mini
GPS Antenna Connector	SMA x 1

Digital Inputs

Isolation	3k VDC
Connector	Screw-fastened Euroblock terminal
Dry Contact	On: short to GND Off: open
I/O Mode	DI
Sensor Type	Dry contact Wet Contact (NPN or PNP)
Wet Contact (DI to COM)	On: 10 to 30 VDC Off: 0 to 3 VDC

Digital Outputs

Connector	Screw-fastened Euroblock terminal
Current Rating	200 mA per channel
I/O Type	Sink
Voltage	24 to 40 VDC

LED Indicators

System	Power x 1 Storage x 1
LAN	2 per port (10/100/1000 Mbps)
Serial	2 per port (Tx, Rx)

Serial Interface

Baudrate	50 bps to 921.6 kbps
Flow Control	RTS/CTS, XON/XOFF, ADDC® (automatic data direction control) for RS-485, RTS Toggle (RS-232 only)
Isolation	N/A
Parity	None, Even, Odd, Space, Mark
Data Bits	5, 6, 7, 8
Stop Bits	1, 1.5, 2

Serial Signals

RS-232	TxD, RxD, RTS, CTS, DTR, DSR, DCD, GND
RS-422	Tx+, Tx-, Rx+, Rx-, GND
RS-485-2w	Data+, Data-, GND
RS-485-4w	Tx+, Tx-, Rx+, Rx-, GND

Power Parameters

Input Voltage	9 to 36 VDC
Power Connector	Terminal block (for DC models)

Power Consumption (Max.)	3.51 A @ 9 VDC 1.39 A @ 24 VDC 0.93 A @ 36 VDC
Power Consumption	34 W (max.)

Physical Characteristics

Housing	Aluminum
IP Rating	IP30
Dimensions (with ears)	275 x 63 x 154 mm (10.83 x 2.47 x 6.06 in)
Dimensions (without ears)	250 x 57 x 154 mm (9.84 x 2.23 x 6.06 in)
Weight	2,168 g (4.82 lb)
Installation	DIN-rail mounting (optional), Wall mounting (standard)

Environmental Limits

Operating Temperature	-40 to 70°C (-40 to 158°F)
Storage Temperature (package included)	-40 to 85°C (-40 to 185°F)
Ambient Relative Humidity	5 to 95% (non-condensing)

Standards and Certifications

EMC	EN 55032/24, EN 61000-6-2/-6-4
EMI	CISPR 32, FCC Part 15B Class A
EMS	IEC 61000-4-2 ESD: Contact: 4 kV; Air: 8 kV IEC 61000-4-3 RS: 80 MHz to 1 GHz: 10 V/m IEC 61000-4-4 EFT: Power: 2 kV; Signal: 1 kV IEC 61000-4-5 Surge: Power: 2 kV; Signal: 1 kV IEC 61000-4-6 CS: 1 V IEC 61000-4-8 PFMF
Safety	EN 60950-1, UL 508, UL 60950-1
Shock	IEC 60068-2-27
Vibration	IEC 60068-2-64

Declaration

Green Product	RoHS, CRoHS, WEEE

MTBF

Time	329,398 hrs
Standards	Telcordia (Bellcore), GB

Warranty

Warranty Period	3 years
Details	See www.moxa.com/warranty

Package Contents

Device	1 x V2403 Series computer
Installation Kit	1 x wall-mounting kit

Cable	1 x terminal block to power jack converter
Documentation	1 x document and software CD 1 x quick installation guide 1 x warranty card

Dimensions

Unit: mm (inch)

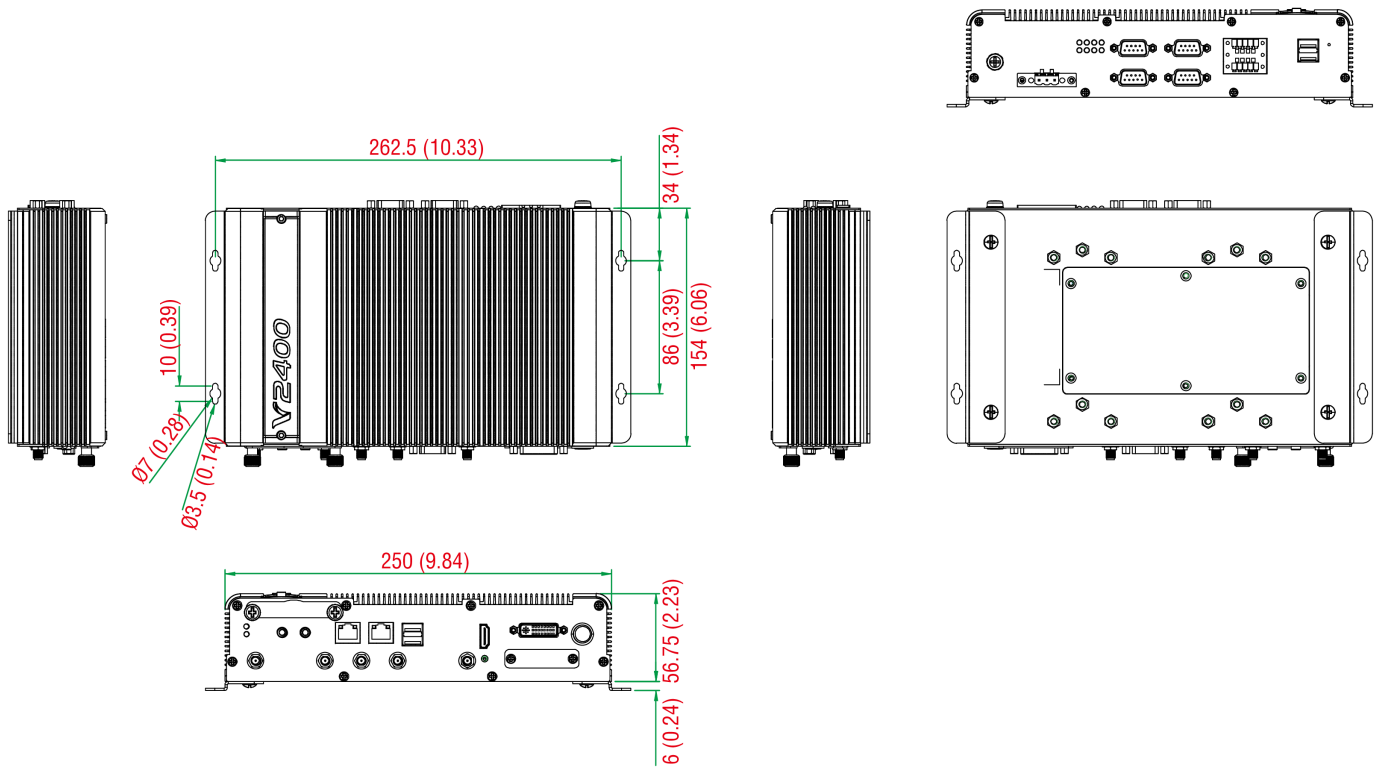

Ordering Information

Model Name	CPU	Memory (Default)	OS CFast (CTO)	Backup CFast (CTO)	SSD/HDD Tray (CTO)	USIM Slot	Antenna Connectors	Operating Temp.
V2403-C2-T	Celeron 1047UE	4 GB	1 (Optional)	1 (Optional)	1 (Optional)	–	–	-40 to 70°C
V2403-C2-W-T	Celeron 1047UE	4 GB	1 (Optional)	1 (Optional)	1 (Optional)	–	–	-40 to 70°C
V2403-C3-T	i3-3217UE	4 GB	1 (Optional)	1 (Optional)	1 (Optional)	–	–	-40 to 70°C
V2403-C3-W-T	i3-3217UE	4 GB	1 (Optional)	1 (Optional)	1 (Optional)	2	5	-40 to 70°C
V2403-C7-T	i7-3517UE	4 GB	1 (Optional)	1 (Optional)	1 (Optional)	2	5	-40 to 70°C
V2403-C7-W-T	i7-3517UE	4 GB	1 (Optional)	1 (Optional)	1 (Optional)	2	5	-40 to 70°C
V2403-C2-T-LX	Celeron 1047UE	4 GB	8 GB	1 (Optional)	1 (Optional)	–	–	-40 to 70°C
V2403-C2-T-W7E	Celeron 1047UE	4 GB	8 GB	1 (Optional)	1 (Optional)	–	–	-40 to 70°C
V2403-C2-T-W7E1	Celeron 1047UE	8 GB	32 GB	1 (Optional)	64 GB MLC	–	–	-40 to 70°C

Accessories (sold separately)

Battery Kits

RTC Battery Kit	Lithium battery with built-in connector

Power Adapters

PWR-24270-DT-S1	Power adapter, input voltage 90 to 264 VAC, output voltage 24 V with 2.5 A DC load

Power Cords

PWC-C7AU-2B-183	Power cord with Australian (AU) plug, 2.5A/250V, 1.83 m
PWC-C7CN-2B-183	Power cord with two-prong China (CN) plug, 1.83 m
PWC-C7EU-2B-183	Power cord with Continental Europe (EU) plug, 2.5A/250V, 1.83 m
PWC-C7UK-2B-183	Power cord with United Kingdom (UK) plug, 2.5A/250V, 1.83 m
PWC-C7US-2B-183	Power cord with United States (US) plug, 10A/125V, 1.83 m

DIN-Rail Mounting Kits

DK-DC50131-01	DIN-rail mounting kit, 6 screws

Wall-Mounting Kits

V2400 Isolated Wall Mount Kit	Wall-mounting kit with isolation protection, 2 wall-mounting brackets, 4 screws

Storage Kits

FK-75125-02	Storage bracket, 4 large silver screws, 4 soft washers, 4 small sliver bronze screws, 1 SATA power cable, 4 golden spacers (only for the V2406 and V2426)

Antennas

ANT-GPS-OSM-05-3M BK	Active GPS antenna, 26 dBi, 1572 MHz, L1 band antenna for GPS
ANT-LTEUS-ASM-01	GSM/GPRS/EDGE/UMTS/HSPA/LTE, omni-directional rubber duck antenna, 1 dBi
ANT-WDB-ARM-02	2.4/5 GHz, omni-directional rubber duck antenna, 2 dBi, RP-SMA (male)
ANT-WCDMA-ASM-1.5	GSM/GPRS/EDGE/UMTS/HSPA, omni-directional rubber duck antenna, 1.5 dBi
ANT-LTE-ASM-02	GPRS/EDGE/UMTS/HSPA/LTE, omni-directional rubber duck antenna, 2 dBi

Wi-Fi Wireless Modules

V2403 Wi-Fi mini Card	SparkLAN WPEA-252NI Wi-Fi mini card , 4 black screws

© Moxa Inc. All rights reserved. Updated Jun 12, 2019.

This document and any portion thereof may not be reproduced or used in any manner whatsoever without the express written permission of Moxa Inc. Product specifications subject to change without notice. Visit our website for the most up-to-date product information.